Naruki Dining Table

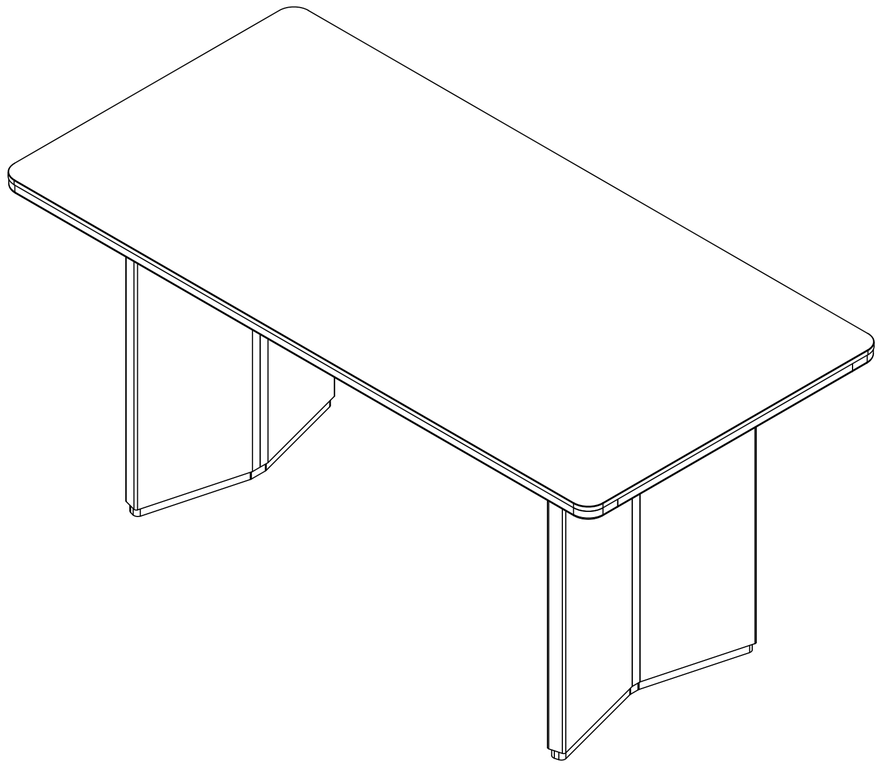

④

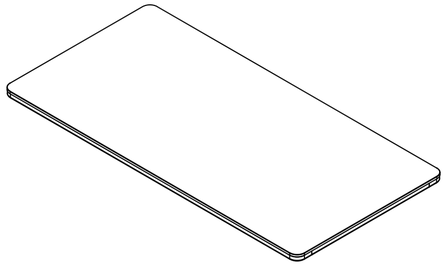

Tabletop x 1

⑤

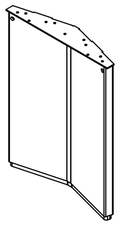

Leg x 2

⑥



20mm M6 Screw x 6

⑦

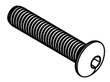

45mm M6 Screw x 4

⑧



M6 Flat Washer x 10

⑨



M6 Split Lock Washer x 10

⑩



Hex Key x 1

Before assembly, lay the packaging carton or a carpet on the floor to protect the product from damage.

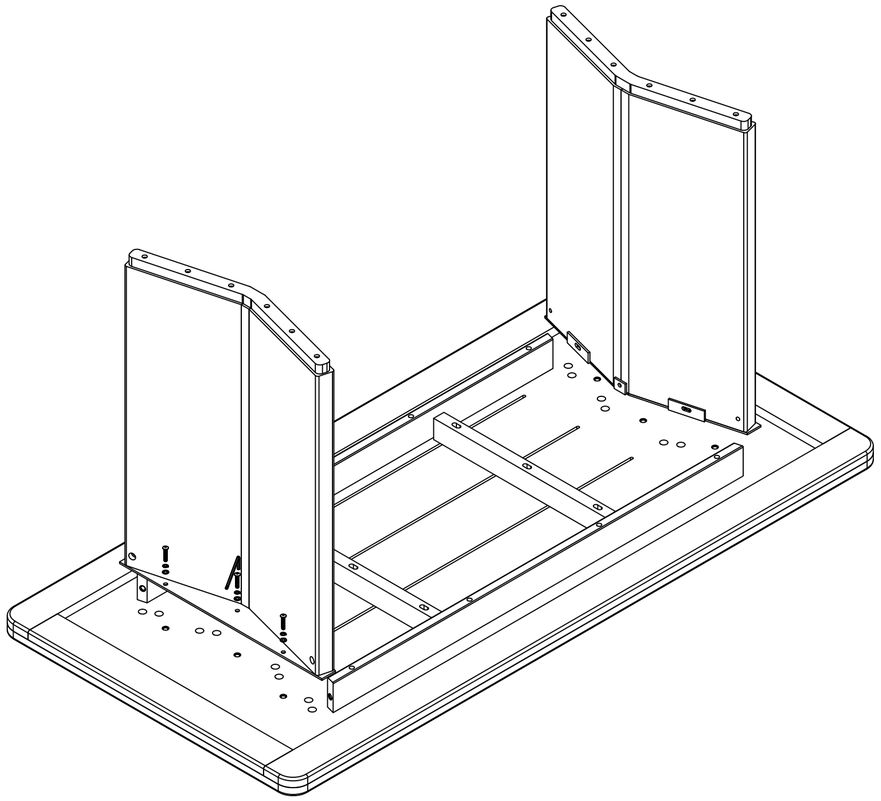

Step 1:

Secure the legs to the tabletop using the provided screws.



20mm M6 Screw×6



Hex Key × 1

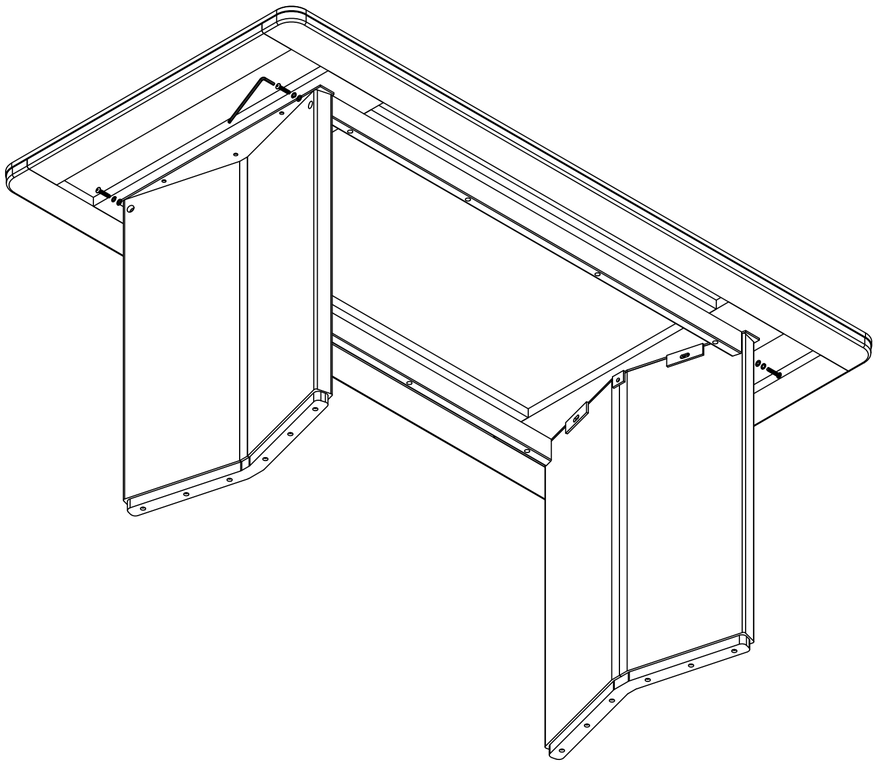

Step 2:

Secure the legs to the support panel using the provided screws.



45mm M6 Screw×4



Hex Key × 1