Misaku Side Table

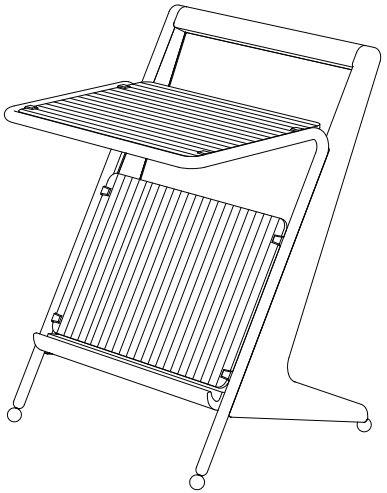

❶

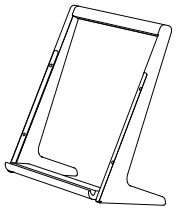

×1

❷

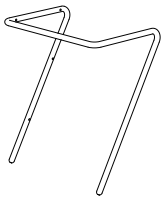

×1

❸



×1

❹

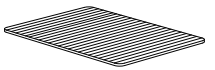

×1

❺

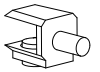

×8

❻

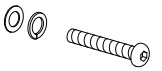

×4

❼

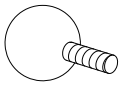

×4

❽



×1

Parts:

① Wooden Frame

② Metal Support Bracket

③ Top Glass Panel

④ Bottom Glass Panel

⑤ Glass Bracket

⑥ 40mm M6 Screw

⑦ Ball Leveling Foot

⑧ Hex Key

Step 1:

Attach the glass bracket to the metal support bracket. Insert the bottom glass panel and top glass panel as shown.

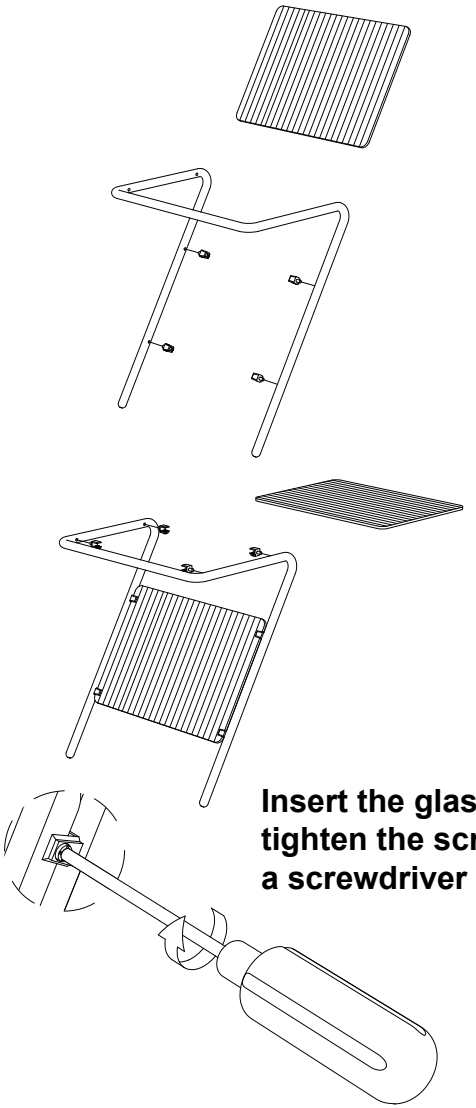

Insert the glass panels, then tighten the screws at the back with a screwdriver

Step 2:

Attach the wooden frame to the assembled unit from Step 1. with M6 screws.

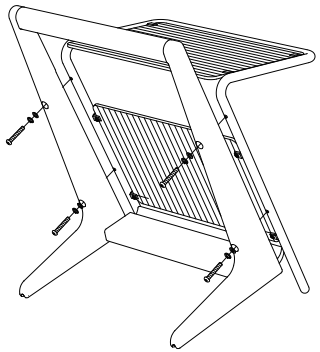

Step 3:

Install the ball leveling feet and ensure all four feet are level on the floor to finish the assembly.

